Operation Manual

Modular Digital Commercial Amplifier

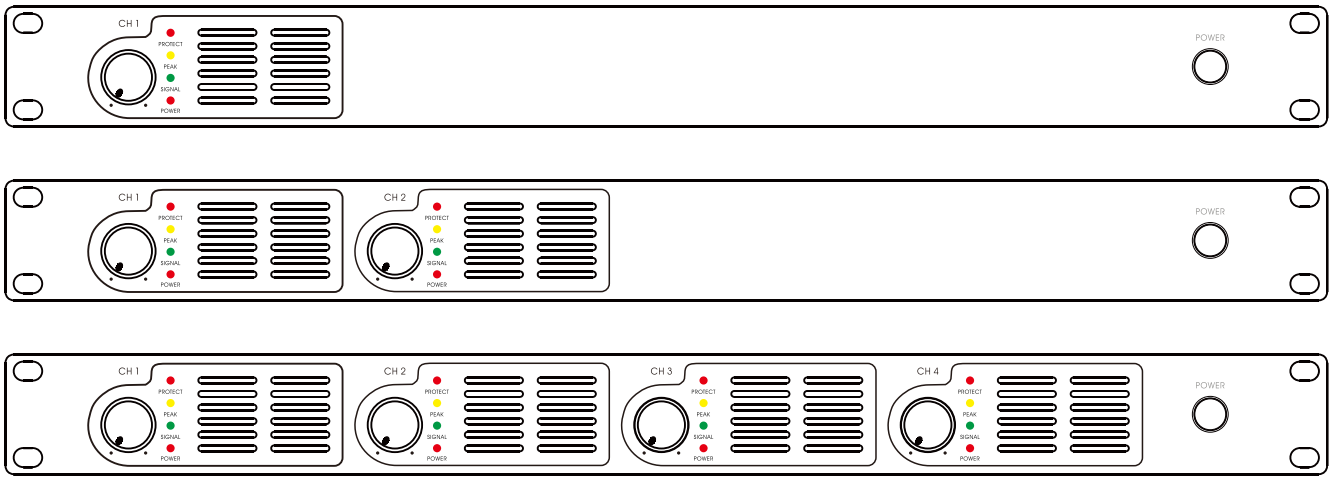

Contens

Welcome.....1

Warning.....1

Installation Environment.....2

Important safety instructions.....2

Features.....3

Accessories.....3

Operation.....3

Front panel.....4

Rear panel.....5

Signal input model setting and speaker connection.....6

Connection for phoenix connector.....7

Common faults and Solutions.....8

Specification.....9

Service.....9

Welcome

A personal welcome to you from the management and employees of Thinuna global.

Thanks you for choosing our high quality product, we will always provide innovative, advanced, reliable products like before.

We are sincerely trust these products will provide years of satisfactory service, but if anything is not to your complete satisfaction, we will endeavor to make things right.

Welcome to Thinuna again, and thank you for becoming part of our worldwide extended family!

警告

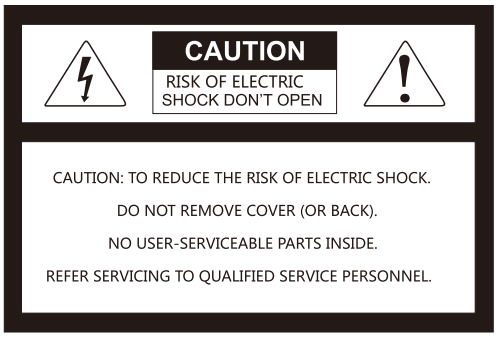



This symbol is intended to alert the user to the presence of uninsulated "dangerous voltage" within the product' s enclosure that may be of suf-ficient magnitude to constitute a risk of electric shock to persons.



This symbol is intended to alert the user to the presence of important operation and mainte-nance (servicing) instructions in the literature accompanying the appliance.

Caution: To prevent electric shock do not use this (polarized) plug with an extension cord, receptacle or other outlet unless the blades can be fully inserted to prevent blade expo-sure.

WARNING

To prevent fire or shock hazard, do not expose the unit to rain or moisture.

Attentions: Pour prévenir les chocs électriques ne pas utiliser cette fiche polarisée avec un prolongateur, une prise de courant on une autre sortie de courant, sauf si les lames peuvent étre insérées à fond sans en laisser aucune partie à découvert.

* For the terminals marked with symbol of " " may be of sufficient magnitude to constitute a risk of electric shock. The external wiring connected to the terminals requires installation by an instructed person or the used of ready-made leads or cords.
*The apparatus shall not be exposed to dripping or splashing and that objects filled with liquids, such as vases, shall not be placed on apparatus.
* The appliance coupler is used as disconnect device, the disconnect device shall remain readily operable.
* Protective earthing terminal. The apparatus should be connected to a mains socket outlet with a protective earthing connection.
* Increase the minimum distance of the prototype to the surrounding environment.
* no naked flame sources, such as lighted candles, should be placed on the apparatus;
* The use of apparatus in tropical climates.
* The use of apparatus in moderate climates.

* Do not install this equipment in a confined space such as a book case or similar unit.
* The apparatus shall not be exposed to dripping or splashing and no objects filled with liquids, such vases, shall be placed on the apparatus.
* Worded: "WARNING FOR YOUR PROTECTION PLEASE READ THE FOLLOWING-WATER AND MOISTURE: Unit should not be used near water(e.g. near a bathtub, washbowl, kitchen sink, laundry tub, in a wet basement, or near a swimming pool, etc).
Care should be taken so than objects do not fall and liquids are not spilled into the enclosure through openings."

Service Instructions
* Worded: "Caution: These servicing instructions are for use by qualified service personnel only. To reduce the risk of electric shock, do not perform any servicing other than that contained in the operating instructions unless you are qualified to do so."
* Location: Instruction Manual.

NOTE : This equipment has been tested and found to comply with the limits for a Class A digital device, pursuant to Part 15 of the FCC Rules. These limits are designed to provide reasonable protection against harmful interference when the equipment is operated in a commercial environment. This equipment generates, uses, and can radiate radio frequency energy and, if not installed and used in accordance with the instruction manual, may cause harmful interference to radio communications. Operation of this equipment in a residential area is likely to cause harmful interference in which case the user will be required to correct the interference at his own expense.

Installation Environment

Installation this system is not difficult and complex. But you still need to spend some time to read this manual and ensure the connection and installation is exact.
Never place this product in an environment which could alter its performance or reduce its service life.
Such environments usually include high levels of heat, dust, moisture, and vibration.

Important Safety Instructions



1. Read these instructions.
2. Keep these instructions.
3. Heed all warnings.
4. Follow all instructions.
5. Do not use this apparatus near water.
6. Clean only with dry cloth.
7. Do not block any ventilation openings. Install in accordance with the manufacturer's instructions.
8. Do not install near any heat sources such as radiators, heat registers, stoves, or other apparatus (including amplifiers) that produce heat.
9. Do not defeat the safety purpose of the polarized or grounding-type plug. A polarized plug has two blades with one wider than the other. A grounding type plug has two blades and a third grounding prong. The wide blade or the third prong are provided for your safety. If the provided plug does not fit into your outlet, consult an electrician for replacement of the obsolete outlet.
10. Protect the power cord from being walked on or pinched particularly at plugs, convenience receptacles, and the point where they exit from the apparatus.
11. Only use attachments/accessories specified by the manufacturer.
12. Use only with the cart, stand, tripod, bracket, or table specified by the manufacturer, or sold with the apparaus. When a cart is used, use caution when moving the cart/apparatus combination to avoid injury from tip-over.
13. Unplug this apparatus during lightning storms or when unused for long periods of time.
14. Refer all servicing to qualified service personnel. Servicing is required when the apparatus has been damaged in any way, such as power-supply cord or plug is damaged, liquid has been spilled or objects have fallen into the apparatus, the apparatus has been exposed to rain or moisture, does not operate normally, or has been dropped.

- Avoid excessive heat, humidity, dust and vibration
  Keep the unit away from locations where it is likely to be exposed to high temperatures or humidity-such as near radiators, stoves, etc. Also avoid locations which are subject to excessive dust accumulation, or to vibration that could cause mechanical damage.

- Avoid physical shocks
  Strong physical shocks to the unit may cause damage. Handle the unit with care.

- Do not open the case or attempt repairs or modifications yourself
  This product contains no user-serviceable parts. Refer all maintenance to qualified Thinuna service personnel. Opening the case and/or tampering with internal circuitry voids the warranty.

- Always power off before making connections
  Always turn the AC mains OFF before connecting or disconnecting cables. This is important to prevent damage to the unit itself as well as other connected equipment.

- Handle cables carefully
  Always plug and unplug cables (including the AC mains power cord) by gripping the connector, not the cord.

- Clear with a soft dry cloth
  Never use solvents such as benzine or paint thinner to clean the unit. Wipe clean with a soft, dry cloth.

Features

1. High efficiency
   Amplifier efficiency reach up to 80% -90%, the power consumption can be reduced more than 60% compared with the analog amplifier .

2. Stable and reliable
   Optimal design of high-performance and low heating can easily suit for the long time installation of emergency paging. We have do lots of stability testing to ensure long life operation.

3. Perfect protection circuit
   DA modular digital amplifier provides a full range of protection circuitry for prevent the damage of over-current, overload, short, DC, over-heating.

4. Lightweight and space saving design
   The lightweight makes installation easy, compact 1U height can be significant savings in rack space. It also saves the transportation and warehousing costs.

5. Independent power supply for each amplifier module
   Each channel amplifier module has own power supply module. Other channel can not be affected when some channel has faults. You can use one or more channel as a backup amplifier.
   Also it can reduce the maintenance cost because of the modular circuit design.

6. Perfect sound quality
   ∑ vector amplification make the sound quality perfect and can protect the speaker for longer life.

7. Convenient front panel volume control and status indicator: power, output signal, clip and protect.

Accessories

One detachable AC power cord is provided for use with this product.

Operation

* Make certain that speakers and input sources are properly connected before power on, keep volume levels turned down before switching on.
* Connect the speaker which has a transformer and the impedance is above the amplifier's rated impedance, or damage may occor.
* Do not leave use when the sound quality abnormal, It may cause the speaker overheating or amplifier malfunction.
* Use the device in the place where the temperature is -10 to 40℃, the humidity lower than 90%RH.
* Regular cleaning equipment and keep the device with a good ventilation cooling effect.

Note: It will start delay mute circuit when the amplifier power on.
This designed with purpose to reduce the damage for speaker from impulse current and protect other devices of the systems.

Front panel

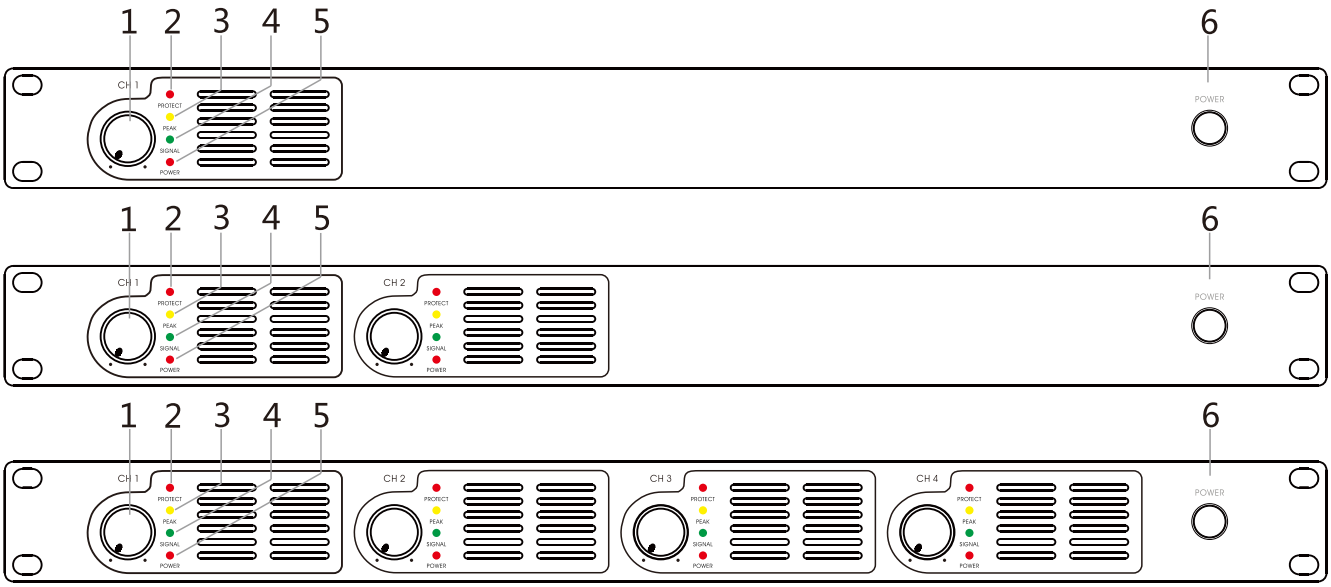

1.Output volume control knob
Adjust the output volume knob, Clockwise the volume +, counterclockwise the volume -

2.Protection indicator
It means the protection circuit of channel is activated when light turns on.
(Reference the P.8 FAQ and solution to solve the problems or contact with the manufacture or the dealer.)

3.PEAK LED
When the light turns on, It means the output level of the channel is excessive. Please turns the output volume knob until the brightness of PEAK LED getting dark or reduce the output signal of audio source. It's not allow to operate the amplifier when the PEAK LED bright for a long time.

4.Output signal level indicator
This indicator show the output status, when the signal outputting the light turns on, if small signal outputting the indicator will blink, when the signal reach a specific value the indicator will be always lighting.

5.Power indicator
When the amplifier power on, this LED on. When the unit power off, this LED off.

6.Power switch
Before you turn on please make sure the audio source and speakers are both connected correctly. Also turns the volume knob to the minimum position.

Rear panel

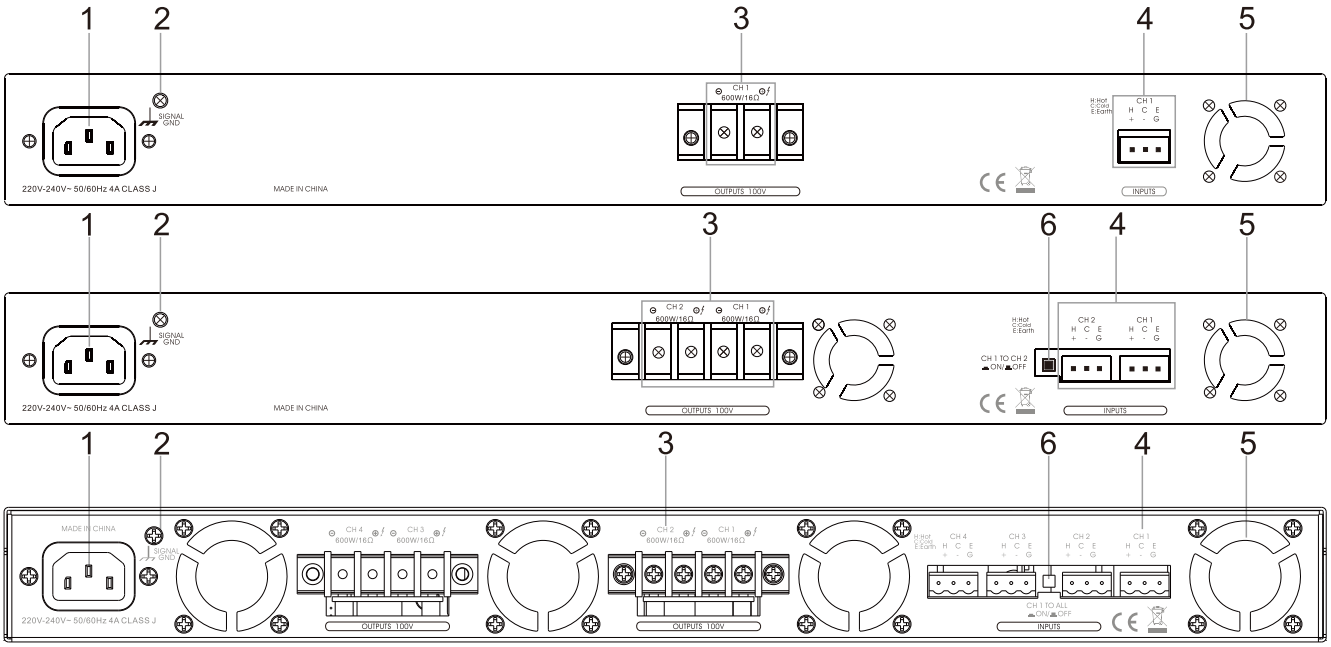

1.AC power connector

This interface use for connect with 220V-240V~ 50/60Hz 4A CLASS J AC power input.

2.Signal GND

This terminal use to connect with other devices. When there is noise, please connect this signal GND to other external devices in order to reduce the noise. (Note: It's not the power GND)

3.Speaker output terminal

Use to connect the high impedance speaker.

4.Audio input connectorl

It's a balanced 3P phoenix connector. H: Hot, C: Cold, E:Earth

5.FAN Vents

These vents provide hot air flow out of the unit. It's important to keep them free of obstructions, to prevent the unit from overheating. It's also important to operate the unit in a dust-free environment.

6.CH1 signal input mode switch (only suitable for multi-channel amplifier)

When setting as on, can transfer the CH1 input signal to all channels (CH1 TO ALL mode), The output can independent control through the output volume control knob of each channels.

When setting as off (FACTORY SETTING), can transfer all channel's input signal to their own channels.

(Note: This switch only can be switched when the amplifier power off.)A

Signal input model setting and Speaker wiring

1.DA-2300H/2600H

2 input and 2 output (FACTORY SETTING)

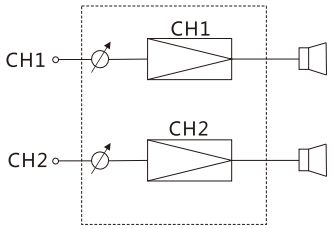

Switch	Setup
CH1 Switch	OFF

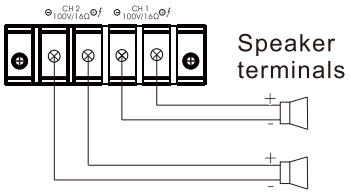

[1 input and 2 ouput]

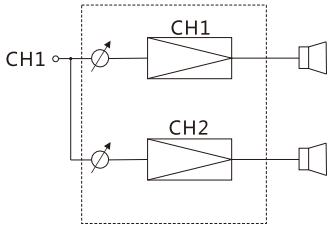

Switch	Setup
CH1 Switch	ON

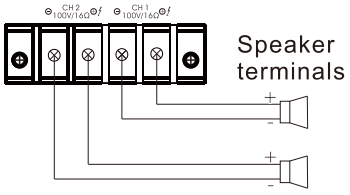

2.DA-4300H/4600H

[4 input 4 output] (FACTORY SETTING)

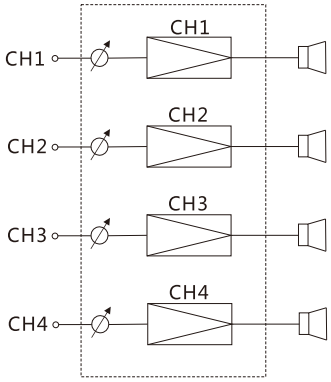

Switch	Setup
CH1 Switch	OFF

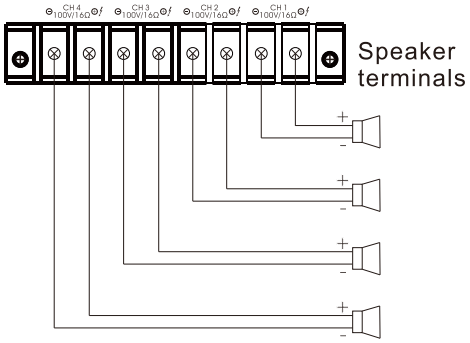

[1 input 4 output]

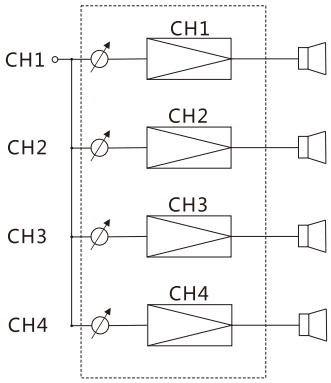

Switch	Setup
CH1 Switch	ON

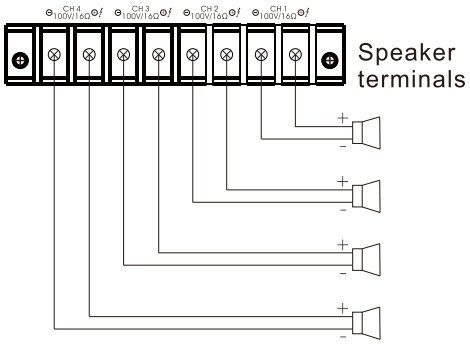

Connection for Phoenix connector

Attention:

1.Must need to use shielding wire.

2.Please pay attention to the naked wire part of wire and avoid soldering tin.

When banding the wire, if the tin solder damage, it will probably increase contact resistance and cause heating.

Please use AWG12~24 type wire.

1.Naked wire part

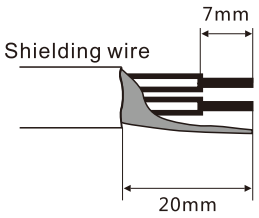

2. Phoenix connector wiring steps

Step 1: Loosen the screw of the terminal before insert the wire.

Step 2: Tight the screw of terminal.

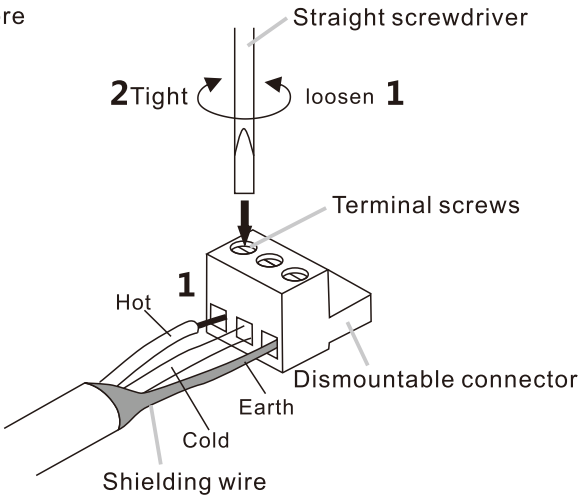

Remark

Suggest for the Straight screwdriver: Blade width for 3mm

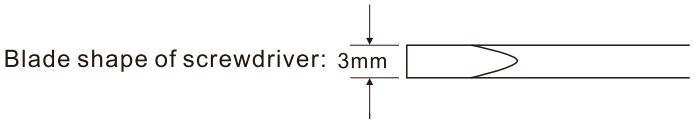

Common Faults And Solutions

No.	Fault	Cause	Solutions
01	No power	A: power supply poor contact	Use a good power supply outlet or sequence power supplier.
		B: fuse has failed	Replace with the same specifications fuse.
02	Power on but unwork	A: Audio Input error	Check the correct audio signal.
		B: wrong speaker load	Connect the speakers correctly
03	Distortion	A: excessive audio output	Set the correct output volume level
		B: wrong input level	Connect the right audio input, don’ t connect microphone signal into this amplifier.
		C: total speaker power is not correct	Connect the speaker correctly, and the total power of speakers can’ t exceed the rated power of these amplifier. And need to excess power for long distance transmission.
		D: incorrect speaker cable	Use a correct speaker cable.
04	Protected activation	A: shorted speaker cable or excessive power	Turn the power off, check the speaker cable and make the correct connection. Turn the power on.
		B: other problems	Check other problems which may cause protected. If still has problem, please contact Thinuna directly or the authorized Distributor for your specific country or region.

Specification

Model	DA-1300H	DA-2300H	DA-4300H	DA-1600H	DA-2600H	DA-4600H
Rate Power	300W x 1	300W x 2	300W x 4	600W x 1	600W x 2	600W x 4
Impedance	100V(1kHz,33Ω)			100V(1kHz,16Ω)		
Input	Input impedance: 10kΩ,(Unbalance), 20KΩ,(Balance); Input sensitivity: +4dB(1.23V)					
	Input level adjust: -∞ ~ 0dB; Phoenix connector					
	CH1 Audio input mode switch: ON:CH1 switch to all Channel, OFF: Each inputs independent					
Speaker output	100V, connect with high impedance speaker					
Growth mode	∑ Vector amplification mode					
Protection circuit	Power amplifier : DC, overheating, short, overcurrent, output protect					
	Power source: Over heat protect, AC overcurrent protect					
Cooling	Forced air cooling, Uninterruptible cooling fan by the front-to-rear direction, 60000 hours of life under 25℃					
Frequency response	20Hz ~ 20kHz(±0.5dB)					
S/N	>90dB					
THD	<0.1% (20Hz~20kHz)					
Power source	220~240VAC, 50/60Hz					
Power Consumption (Account by each modul)	Full-load power output(330W), Power consumption 360W			Full-load power output(670W), Power consumption 750W		
	1/3 power output (1kHz), Power consumption 120W			1/3 power output (1kHz), Power consumption 238W		
	1/8 power output (1kHz), Power consumption 60W			1/8 power output (1kHz), Power consumption 120W		
	Standby power conumption: 35W			Standby power consumption: 40W		
Weight	4.8kg	5.7kg	7.7kg	4.8kg	5.8kg	7.8kg
Temperature/Humidity	-10℃ ~ +40℃, <90% (no condensate)					
Dimensions	482 (W) x 44 (H) x 354 (D) mm;0.075CBM					

Service

Procedures

Ensure the problem is not related to operator error, or external system devices, Once it is certain that the problem is related to the product contact your warranty provider as described in the warranty section of this manual.

Variations

Variations of this product exist to reflect the variations in AC power requirements throughout the world. Product supplied through local sources are compatible with local AC power requirements 110VAC or 220VAC.

Optional accessory

This product do no have others optional accessory.

Warranty

Warranty terms and conditions vary by country and may not be the same for all products. Terms and conditions of warranty for a given product may be determined first by locating the appropriate country which the product was purchased in, then by locating the product type.

To obtain specific warranty information and available service locations contact Thinuna directly or the authorized distributor for your specific country or region.